ENGINEERING
TOMORROW

Data sheet

Superheat Controller

Type EKD 316 and EKD 316C

EKD 316 / EKD 316C is a superheat controller for the stepper motor valve that can be used where there are requirements for accurate control of superheat in connection with refrigeration.

The controller and valve can be used where there are requirements for accurate control of superheat in connection with refrigeration.

Applications:

- Processing plant (water chillers)
- Cold store (air coolers)
- A/C plant
- Heat pumps
- Air conditioning

Benefits

- The superheat is regulated to the lowest possible value.
- The evaporator is charged optimally – even when there are great variations of load and suction pressure.
- Energy savings – the adaptive regulation of the refrigerant injection ensures optimum utilisation of the evaporator and thus a high suction pressure.

Main features

- Regulation of superheat
- MOP function
- ON/OFF input for start/stop of regulation
- Relay output to alarm
- MOD bus communication
- Safety features and
- Alarm indications

Contents

Pages
Applications 3
Function overview 3
Data 4
Ordering 4
Dimensions 4
Accessories 4
Related products 4
Connections 5
Configuration 6
Parallel Evaporators with common suction line 7
Data communication 8
Installation 9
Installation sensors 10
Start of controller 11
Settings and checks to be made before start 11
Stepper motor valve type 12
Operation 13
Types of regulation 14
Manually operating the valve 15
Finding the optimum settings 16
If the superheat fluctuates 16
Troubleshooting 17
Alarms 17
Appendix I 18
- Menu survey EKD 316 ..... 18 - 19
- Survey of functions ..... 20 - 21 - 22
Appendix II 23
- General information to MODBUS communication via a PLC etc. 23
- EKD 316 – Parameter identification (modbus) 24
- EKD 316C – Parameter identification (modbus) ..... 25 - 26
- Installation considerations 27
List of literature 27

Acronyms and abbreviations used in this manual:

LOC	Loss of charge indication
SH	Superheat
MOP	Maximum operating pressure
MSS	Minimum stable superheat
PNU	Parameter number
T_e	Saturated suction temperature
P_e	Evaporator pressure
S_2	Evaporator temperature
S_4	Evaporator outlet temperature
OD	Opening degree
EEV	Electronic expansion valve
ΔTm	Temperature difference between media temperature and evaporating temperature

Applications

The following gives an idea of the application scope of the EKD 316 / EKD 316C controller.

Water chiller using direct expansion
The most common application is water chillers using direct expansion. The regulation can be single loop using an AKS 32R pressure transmitter to measure evaporator pressure and an S2 sensor to measure superheated gas. If double loop regulation is used, the S4 sensor should be located at the water outlet pipe to measure the leaving water temperature. It is recommended to start with factory settings.

The application diagram shows the use of EKD 316 as a superheat controller, where temperature sensor AKS 21A and pressure transmitter AKS 32R have been shown as an example.

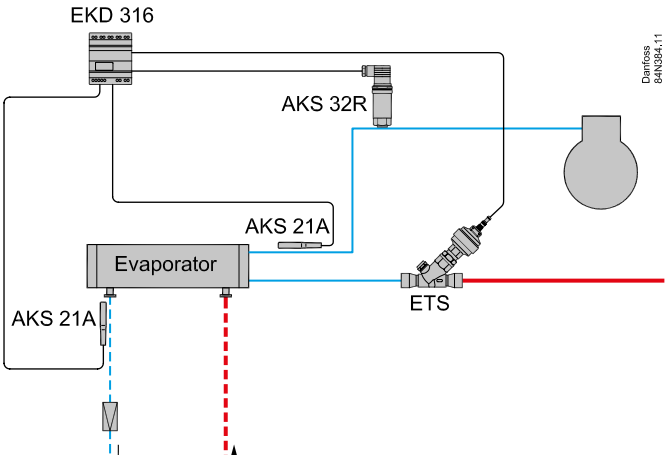

Function overview

Minimum Stable Superheat (MSS)
The controller will search for the minimum stable superheat between an upper and lower boundry. If the superheat has been stable for a period, the superheat reference is decreased. If the superheat becomes unstable, the reference is raised again. This process continues as long as the superheat is within the bounds set by the user. The purpose of this is to search for the lowest possible superheat that can be obtained while still maintaining a stable system. The superheat reference can also be fixed, in which case this function is disabled.

Maximum Operating Pressure (MOP)
In order to reduce the strain of the compressor, a maximum operating pressure can be set. If the pressure comes above this limit, the controller will control the valve to provide a lower pressure instead of a low superheat. The limit for this function is usually a fixed pressure, but it is possible to offset the limit temporarily.

Stand-alone function
EKD 316 / EKD 316C is designed to operate in conjunction with a system master controller, which will control the EKD 316 / EKD 316C via MODBUS or analog signal. It is however possible to use it in a standalone mode using one temperature and one pressure transducer.

Manual Control as a valve driver
The valve can be controlled manually by setting the desired operating degree using MODBUS. Alternatively, the controller may also be started and stopped externally using the analog signal 4 to 20 mA/0 to 10 V DC, /1 to 5 V DC.

Forced opening during startup
In some applications it is necessary to open the valve quickly when the compressor turns on to prevent suction pressure becoming too low. This is ensured by setting a fixed opening degree and a startup time for the controller. Note that this will give a fixed opening degree for the duration of the start time, regardless of the superheat value.

Relay
The relay for the alarm function is an alternating relay. In the event of an alarm, the relay will close, which may, for instance, be used for an alarm buzzer.

Data

Compatible valves EKD 316 C	ETS / CCM / CCMT 0 - 42 / CTR / ETS 6 / ETS C / KVS C	
Compatible valves EKD 316	ETS / CCM / CCMT 0 - 42 / CTR / ETS 6	
Supply voltage	ETS / KVS / CCM / CCMT 2 - CCMT 8 24 V AC / DC ±15% 50/60 Hz, 10 VA / 5 Watt ETS 6 / CCMT 16 - CCMT 42: 24 V AC / DC ±15% 50/60 Hz, 15 VA / 8 Watt *(the supply voltage is not galvanically separated from the input and output signals)*	
Power consumption	Controller ETS step motor	5 VA 1.3 VA
Input signal *)Ri: mA: 400 ohm V: 50 kohm	Current signal *	4 - 20 mA or 0 - 20 mA
	Voltage signal *	0 - 10 V or 1 - 5 V
	Pressure transmitter	AKS 32R
	Digital input from external contact function	
Sensor input	2 pcs. Pt 1000 ohm	DI : < 800 ohm = ON DI : > 30 kohm = OFF
Alarm relay	1 pcs. SPDT,	Max 24V, 1A resistive - Class II
Step motor output	EKD 316 : Switching 30 - 300 mA RMS EKD 316C : Switching 30 - 600 mA RMS	
Data communication	RS 485 Modbus data communication	
Environments	0 to +55°C, during operations -40 to +70°C, during transport	
	20 - 80% Rh, not condensed	
	No shock influence/vibrations	
Enclosure	IP 20	
Weight	300 g	
Montage	DIN rail	
Operation	External display type EKA 164A or AK-ST via data communication and system unit	
Approvals	EU Low Voltage Directive and EMC demands re. CE-marking complied with. LVD-tested acc. to EN 60730-1 and EN 60730-2-9 EMC-tested acc. to EN50081-1 and EN 50082-2 c UL us	
Battery backup	If battery backup is used, the requirements for the battery are: 18 - 24 V DC See also page 12.	
Max. distance between controller and valve	30 m	

Ordering

Type	Function	Code no.
EKD 316C	Superheat controller (with terminals)	**084B8045**
EKD 316	Superheat controller (with terminals)	**084B8040**
EKA 164A	External display (with MODBUS communication) For technical details please see literature reference on last page.	**084B8563**
EKA 183A	Programming key	**084B8582**

Dimensions [mm]

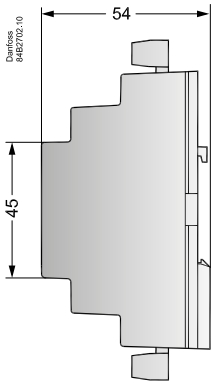

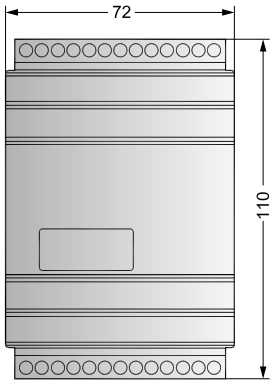

Related products

Pressure transducer	Temperature sensor	External display	Programming key
AKS 32R, NSK 	AKS 21, AKS 11 	EKA 164A 	EKA 183A

Connections

Necessary connections

Terminals:

1-2	Supply voltage 24 V AC / DC
3-4	Battery (the voltage will close the ETS valve if the controller losses its supply voltage). The battery voltage must not be connected from terminals 1 and 2.
5-8	Supply to stepper motor
9-13	Operation via data communication EITHER EKA 164A OR System unit + software. It is important that the installation of the data communication cable be done correctly. For further information on data communication: see literature list page 23
20-21	Switch function for start/stop of regulation. ⚠ **Note:** If a switch is not connected, terminals 20 and 21 must be short circuited.

Application-dependent connections

Superheat control

14-15	Pt 1000 sensor at evaporator outlet (S2)
15-16	Pt 1000 sensor for measuring air temperature (S4)
17-19	Pressure transmitter type AKS 32R ⚠ **Note:** The signal can **not** be shared with other controllers

Control of the valves opening degree with analog signal

21-22	Current signal or voltage signal from other regulation (Ext. Ref.)
24-26	Alarm relay There is connection between 24 and 26 in alarm situations.

⚠ A dedicated transformer must be used.

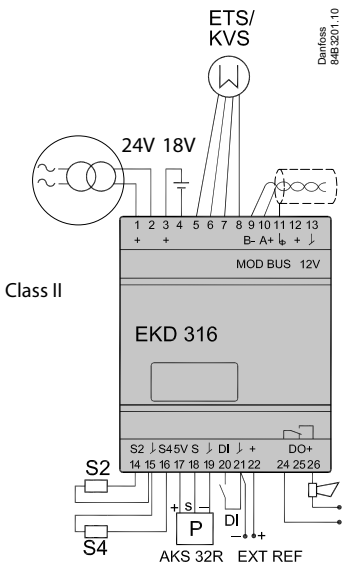

Connections EKD 316

ETS / KVS / CCMT2 - CCMT42 / CCM / CTR	
White	5
Black	6
Red	7
Green	8

Connections EKD 316 C

ETS C / KVD C / ETS / KVS / CCMT2 - CCMT42 / CCM / CTR	
White	5
Black	6
Red	7
Green	8

Connections EKD 316 / Connections EKD 316 C

ETS 6 / CCMT 0 - CCMT 1	
Orange	5
Yellow	6
Red	7
Black	8

⚠ **Warning**

Any external connection with grounding could create a ground loop through a diode in the rectifier bridge which could destroy the power supply in EKD 316 / EKD 316C.

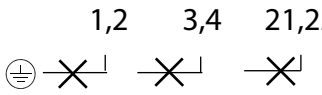

Connection to earth will destroy the controller

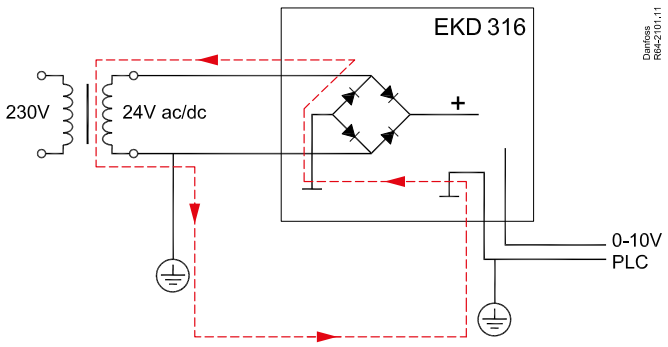

Configuration

Independent superheat regulation

The superheat in the evaporator is controlled by one pressure transmitter P and one temperature sensor S2. This can be done setting o61 = 2.
Fitting the "S4" temperature sensor is optional, but the regulation is improved by an "inner loop control" when the sensor is fitted.

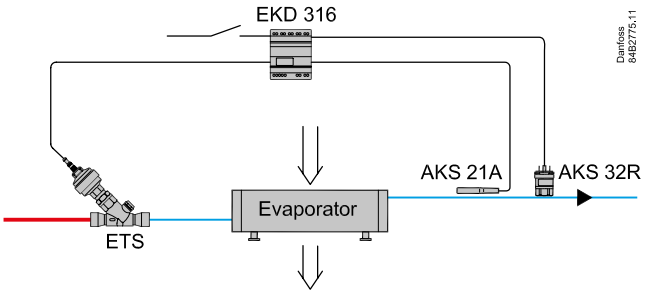

Function	Parameter	Value
Application Mode – superheat regulation	o61	2
Selection of normal control mode	056	1

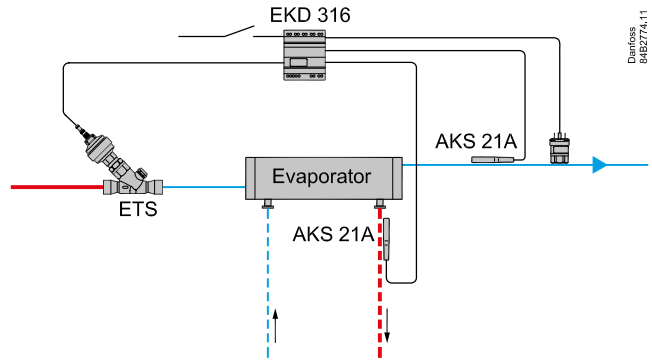

Function	Parameter	Value
Application Mode – superheat regulation	o61	2
Selection of inner loop control mode	056	2

We recommend this inner loop control application mode setting, if the superheating is to be regulated with precision. Here the S4 and T0 temperature are part of an inner loop control.
The regulation algorithms require that a temperature sensor be fitted in the chilled medium.
The temperature sensor is connected to input "S4" and mounted in the chilled medium *after* the evaporator. (Danfoss calls a sensor S4 when it is mounted in the refrigerant after the evaporator).

External start/stop of regulation

The controller can be started and stopped externally via a contact function connected to input terminals 20 and 21. Regulation is stopped when the connection is interrupted. The function must be used when the compressor is stopped. The controller then closes the ETS valve so that the evaporator is not charged with refrigerant.

Battery

For safety reasons the liquid flow to the evaporator must be cut off if there is a power failure to the controller. As the ETS valve is provided with a stepper motor, it will remain open in such a situation. When mounting the battery backup, the valve will close in the event of a power cut.

Valve driver (Via Analog Signal)

This is where the controller receives signals from another controller, after which it controls the valve's opening degree.
The signal can either be a current signal or a voltage signal.
The valve can be any of the stepper motor valves listed on "valve overview".
Details can be found on the section "valve overview".

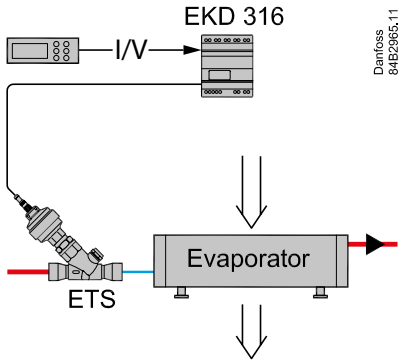

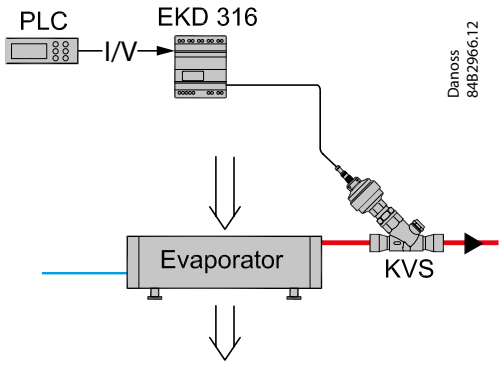

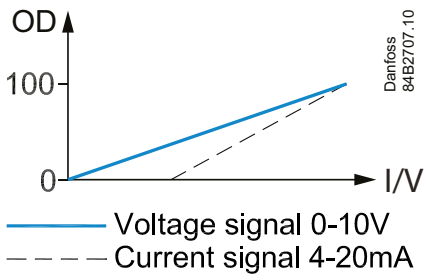

Parameter	Value	Function
o61	1	Application Mode - control via analog signal

Relays

The relay for the alarm function is an alternating relay.
In the event of an alarm the relay will close to connect terminals 24 and 26. This can, for instance, be used for an alarm buzzer. When there is no alarm or the controller is off, terminals 24 and 25 are connected.

Parallel Evaporators with common suction line
Since the introduction of EEV, it has been observed the phenomena the so-called Sleeping Evaporators phenomena have been observed. This happens when the outlet of the evaporators has a common suction line.

This is seen when using the *Adaptive superheat Mode* in some of the controllers. What happens is that by controlling using the same superheat reference in both controllers, evaporator No. 1 might be controlling in the correct manner, but the EEV for evaporator No. 2 might be closed.

However, the measured superheat of controller No. 2 will be the same as No. 1 because both S2 sensors will measure the same temperature.

In other words, the open degree of the EEV integrates down to 0% but, the measured superheat complies with the reference valve.

One solution is to use the *Load-defined superheat Mode* in the controller because the measured superheat governs the opening degree of the connected EEV.

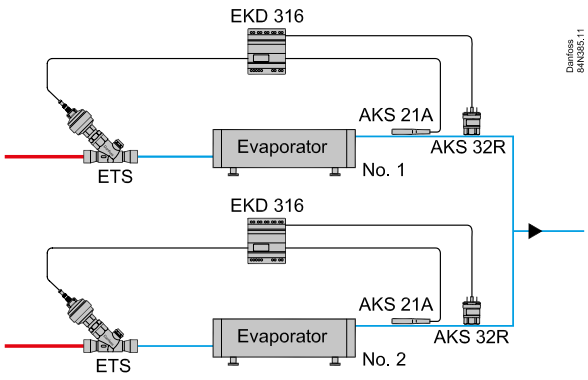

Data communication

Data communication with the EKD 316 is possible using one of the following two ways:

- 1. Via External display (EKA 164A)
- 2. Via standard MODBUS Device

Via external display (EKA 164A)
Use an external display to operate the controller. This must be done as follows:

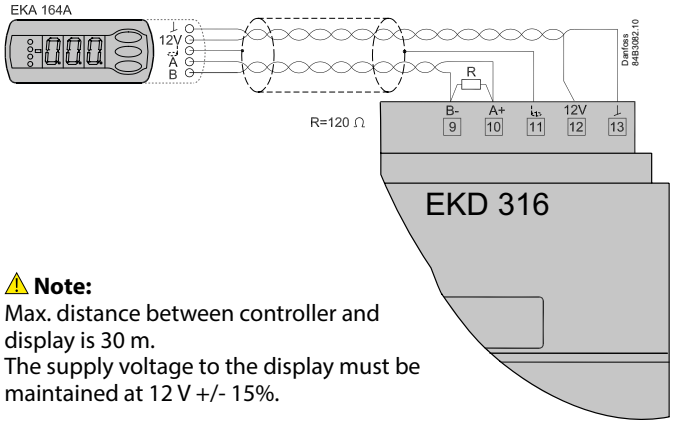

⚠ **Note:**
Max. distance between controller and display is 30 m.
The supply voltage to the display must be maintained at 12 V +/- 15%.

The values are shown in three digits, and with a setting you can determine whether the temperature is shown in °C or in °F. (Pressure in bar or psig.)

In order to change a setting, the upper and lower buttons will give you a higher or lower value depending on the button you are pushing. But before you change the value, you must have access to the menu. You obtain this by pushing the upper button for a couple of seconds – you will then enter the column with parameter codes. Find the parameter code you want to change and push the middle button until the value for the parameter is shown. When you have changed the value, save the new value by pushing once more on the middle button.

By pushing the middle button you go directly to the Main Switch setting (r12).

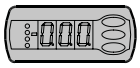

Example
Set a menu
1. Push the upper button until a parameter is shown
2. Push the upper or the lower button and find the parameter you want to change
3. Push the middle button and the value is shown
4. Push the upper or the lower button and select the new value
5. Push the middle button again to conclude the setting

Via standard MODBUS device
Communication direct to MODBUS RTU protocol.

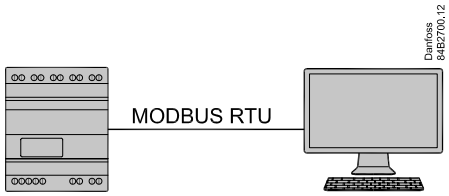

There are 3 different MODBUS baud rates available, which are 9,600 baud, 19,200 baud and 38,400 baud.
The default MODBUS baud rate is 19,200 baud.

A scan is performed once the EKD 316 / EKD 316C controller is connected to the network. This will auto detect the baud rate used by the master and will automatically adjust to its setting. This process usually take a few seconds.

The only available fixed communication settings are 8 data bit, EVEN parity and 1 stop bit.

The default unit address is 240 which, can be changed using parameter "03 unit address".

EKD 316 can be operated from a PC that has AK-ST software loaded.

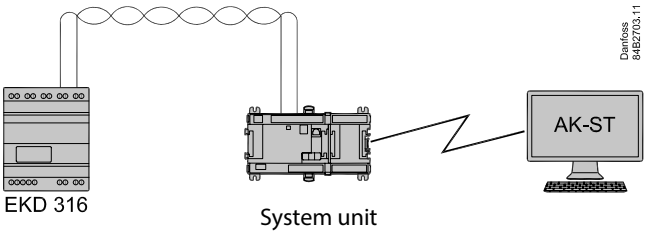

⚠
Communication from a third party controller or monitoring system
Settings and values can be read from the EKD 316 / EKD 316C via MODBUS. However, the sensor values are from the local sensors and software has not been developed to receive values from another source.

A data list of EKD 316 parameters is provided in Appendix II and the data for EKD 316C you can find it in the installation guide DKRCC.PI.RR0.A1.02

Please note that it is not possible to connect the EKA 164A universal display in this configuration.

Installation

The EKD 316 / EKD 316C is normally mounted on a DIN rail, and the necessary connections are shown in the diagram. If the sensor S4 is not used to measure air temperature in connection with thermostat function or as part of the controlling loop, then it is not necessary to connect the S4 sensor. The 18-24 V battery input at terminals 15 and 16 is not required if battery back-up is not needed.

Power supply considerations
The terminals 1 and 2 for the voltage supply are not isolated from the rest of the controller terminals. This means care should be taken when connecting two or more controllers to the same voltage supply. In the example below, the two controllers are connected to the same voltage supply and on the input side, terminals 21 (Analogue Input) are connected to each controller and similarly terminals 22 (GND).

This way of connecting the controllers can cause damage and should be avoided.

⚠ **Note:**
The same applies to other signal inputs e.g. terminals 2 and 4. See warning page 5.

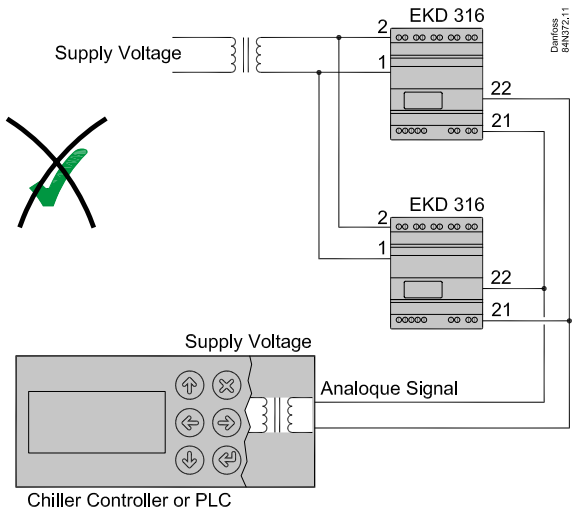

If the controllers are operated by a common analogue signal as above, the voltage supply should be separate as shown below.

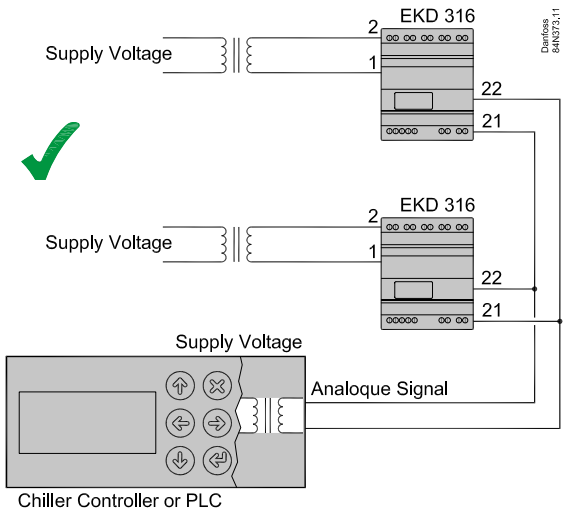

Stepper motor output
After installation the following checks can be made to the connection between the EKD 316 controller and the stepper motor of the ETS 6 / ETS valve.

With the power off, check that resistance between terminals 5 and 6 and terminals 7 and 8 is approximately:
ETS 6 / CCMT 0 : 46 Ohm
CCMT 1 : 31 Ohm
ETS / KVS / CCMT 2 - CCMT 8 / CCM : 53 Ohm
CCMT 16 - CCMT 42: 29 Ohm
ETS C / KVS C : 10 Ohm.
Make slight allowances for cable resistance.

If resistance values differ from above, ensure that the cable is properly connected to the actuator of the stepper motor valve.

1. With the power on and parameter o18 set to 1, measure the phase current from terminal 5 (or 6) and terminal 7 (or 8) with a true RMS multimeter when the valve is operating. The valve can be driven from 0% to 100% and vice versa by changing the valve opening percentage in parameter o45. The phase current should be 100 mA rms (for ETS) when operating.
2. If this not the case and the cable connections are correct, then the stepper motor driver in the EKD 316 might be damaged. Remember to set o18 back to 0 after checks. If checks 1) and 2) are not correct, ensure that motor cable corrections are correct and the cable length is less than 30 meters.

Output relay contact
The contact of the alarm relay will be made when there is an alarm.

Battery back-up
A battery back-up can be connected to terminals 3 (+) and 4 (-). It is recommended to use 24 V DC 100 mAh UPS. The voltage should be at least 18 V and this can be achieved by using two 9 V 100 mAh batteries in series, if temporary solution is to be used.

Installation sensors

S2 sensor positioning in the suction line
The position of the S2 sensor is crucial for an optimal control of the liquid injection.
The main purpose is to measure temperature of the superheated gas leaving the evaporator. In addition to this, the S2 sensor plays an important role detecting fast changes of superheat. Suction pressure is on the whole stable whereas the leaving gas condition is dependent on the temporary mixture of gas, liquid refrigerant and oil.

The sensor is also there to react quickly on liquid passing the evaporator, to avoid damage to the compressor.

An S2 sensor placed two-thirds of the way up a riser after an oil trap is where conditions are at their optimum, i.e. good mixture of gas, oil and liquid droplets, provided this is not more than 0.5 m from the evaporator.
If a horizontal pipe is the only option, the S2 sensor must be placed at least half a meter away from the evaporator.

S1 (Po pressure) is less critical but must be close to the actual suction pressure right after the evaporator.

If the measured value is 1-2 K lower than the actual value of Po right after the evaporator, it may cause the evaporator to flood. This is the case when the pressure transmitter is located in the machine room away from the evaporator. If the measured value is higher than the actual value of Po, the evaporator might be starved of liquid.

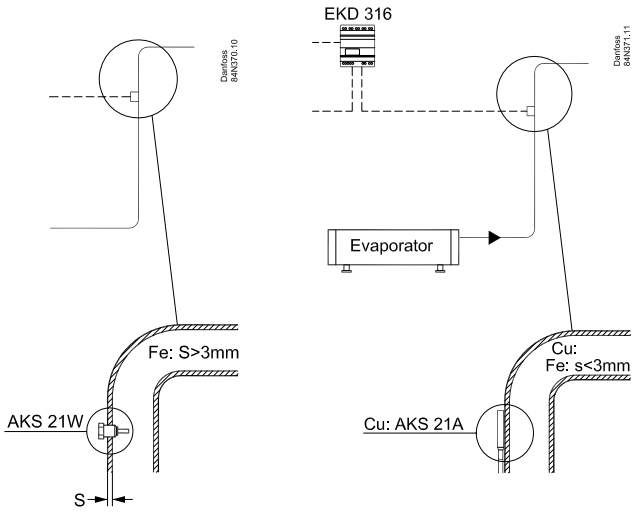

Choice of S2 sensor type
Surface sensor S2 *
Suction pipe of copper or on thin (≤ 3mm) steel pipe.
Remember to put on heat conducting paste and insulate the sensor.

Pocket sensor S2 **
Suction pipe of steel ≥ 3mm

*) Pt1000 Ω Type AKS21 or AKS10
**) Pt1000 Ω Type AKS21W

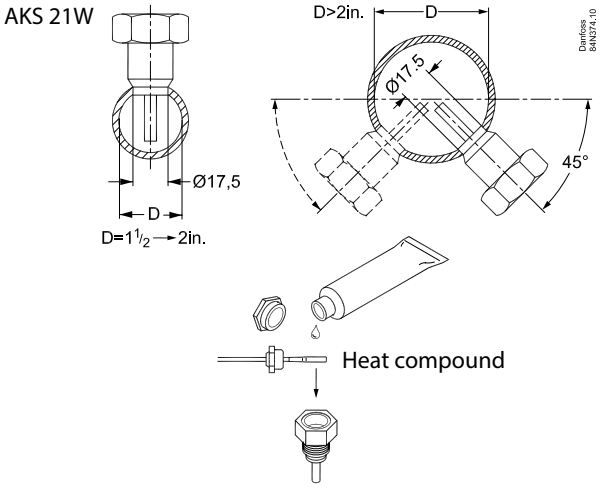

S2 sensor fixing on the suction pipe:

When the S2 sensor is fixed to the surface of the suction pipe, the angle of the sensor position will depend on the diameter of the pipe, as given in the following diagram:

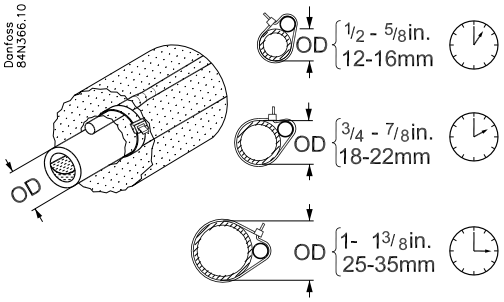

Start of controller

When the electric wires have been connected to the controller, the following points have to be attended to before the regulation starts:

1. Switch off the external ON/OFF switch that starts and stops the regulation.
2. Follow the menu survey in Appendix I, and set the various parameters to the required values.
3. Switch on the external switch, and regulation will start.
4. Follow the actual superheat on the display.

Settings and checks to be made before start

Basic settings

Before using the controller, there are settings that have to be made for each individual application. These are the refrigerant type, the pressure transducer range and the total number of steps for the ETS valve.

It is good practice and in some cases necessary to set the Main Switch r12 to OFF when making these changes.

If terminal 20-21 has been used as a start/stop regulation, then the interaction between internal and external start/stop function is, as shown on the following table:

Internal Start/stop	External start/stop (DI)		Regulation	Sensor monitoring	Configuration settings
Off	Off	=>	Off	No	Yes
Off	On	=>	Off	No	Yes
On	Off	=>	Off	Yes	No
On	On	=>	Yes	Yes	No

Refrigerant type

It is possible to choose from a list of 42 different refrigerants in the controller.

If the refrigerant is not found on the list, it is possible to enter the Antione constants for the unlisted refrigerant using MODBUS communication and setting o30 to 13.

Refrigerant setting Before refrigeration can be started, the refrigerant must be defined. You can select the following refrigerants:						o30
1 = R12	9 = R500	17 = R507	25 = R290	33 = R422D	41 = R449A	
2 = R22	10 = R503	18 = R402A	26 = R600	34 = 427A	42 = R452A	
3 = R134a	11 = R114	19 = R404A	27 = R600a	35 = R438A		
4 = R502	12 = R142b	20 = R407C	28 = R744	36 = Opteon XP10		
5 = R717	13 = User-defined	21 = R407A	29 = R1270	37 = R407F		
6 = R13	14 = R32	22 = R407B	30 = R417A	38 = R1234ze		
7 = R13b1	15 = R227	23 = R410A	31 = R422A	39 = R1234yf		
8 = R23	16 = R401	24 = R170	32 = R413A	40 = R448A		
For EKD 316C the default factory setting for parameter o30 is 0 = none refrigerant selected (⚠ **Warning**: *Wrong selection of refrigerant may cause damage to the compressor).*						

Stepper motor valve type

It is important to select the right valve type as listed under Valve definition. On using external display EKA 164A, the valve selection will be displayed as shown in table below.

The number of steps and steps/sec can also be set in the controller at addresses n37 and n38 respectively:

In practise, the EKD 316 / EKD 316C external display can only manage three digits. Therefore the set value at address n37 is always 10 times greater, i.e. if n37 is set to 263 then the true value is 2630. The same applies to the n37 address in the MODBUS communication system.

Valve overview EKD 316

n03	EKA 164A	Danfoss valve type	n37	n38
0	25	ETS 12.5, ETS 25, KVS 15	262	300
1	50	ETS 50, CCM 10, CCM 20, CCM30	262	300
2	100	ETS 100, CCM 40	353	300
3	250	ETS 250, KVS 42	381	300
4	400	ETS 400	381	300
5	uSr	User defined	-	-
6	SA9	UKV/SKV/VKV/PKV	24	16
7	6	ETS 6	24	16
8	C8	CCMT 2, CCMT 4, CCMT 8	110	220
9	C16	CCMT 16	80	200
10	C24	CCMT 24	140	200
11	C30	CCMT 30	230	200
12	C42	CCMT 42	220	200
13	CtR	CTR	660	75
14	C0	CCMT 0	24	16
15	C1	CCMT 1	24	16

Valve overview EKD 316C

n03	EKA 164A	Danfoss valve type	n37	n38
0	25	ETS 12.5, ETS 25, KVS 15	262	300
1	50	ETS 50, CCM 10, CCM 20, CCM30	262	300
2	100	ETS 100, CCM 40	353	300
3	250	ETS 250, KVS 42	381	300
4	400	ETS 400	381	300
5	uSr	User defined	-	-
6	SA9	UKV/SKV/VKV/PKV	24	16
7	6	ETS 6	24	16
8	C8	CCMT 2, CCMT 4, CCMT 8	110	220
9	C16	CCMT 16	80	200
10	C24	CCMT 24	140	200
11	C30	CCMT 30	230	200
12	C42	CCMT 42	220	200
13	CtR	CTR	660	75
14	C0	CCMT 0	24	16
15	C1	CCMT 1	24	16
16	non	No valve selected	10	160
17	CoL	ETS 12C, ETS 24C, ETS 25C, ETS 50C, ETS 100C, KVS 2C, KVS 3C, KVS 5C	60	160

Pressure transmitter

The range of the pressure transmitter can be set by entering the transmitter's minimum value at address o20 and maximum value at address o21. The pressure sensor input is set up by default to accept an AKS 32R pressure transducer. If another sensor is to be used, it is important to note that it needs to be a 5 V ratiometric type (10% - 90% of supply voltage).

The default range for the typical pressure transducer is 0 to 16 bar. This can be changed by setting the minimum transducer pressure, "o20 MinTransPres", and the maximum transducer pressure, "o21 MaxTransPres", to the new values.

Working range for pressure transmitter Depending on the application a pressure transmitter with a given working range is used.		
For the range of (-1 to 12 bar), the min. value is set to -1 bar	o20	MinTransPres.
For the range of (-1 to 12 bar), the max. value is set to 12 bar	o21	MaxTransPres.

Operation

Superheat function

You may choose between two kinds of superheat regulation, either:

- Minimum stable superheat (MSS)
- Load-defined superheat

The regulation modes for controlling superheat

There are two different ways of controlling superheat, i.e. controlling according to the minimum stable superheat (MSS) and Load Defined superheat.
The parameter SH mode selects the controlling form where it can be set to MSS when set to 1, or Load Defined superheat when set to 2.

Minimum stable superheat (MSS)

The superheat control algorithm will attempt to regulate the superheat down to the lowest stable value between the minimum superheat setting, "Min SH" and the maximum superheat setting, "Max SH".

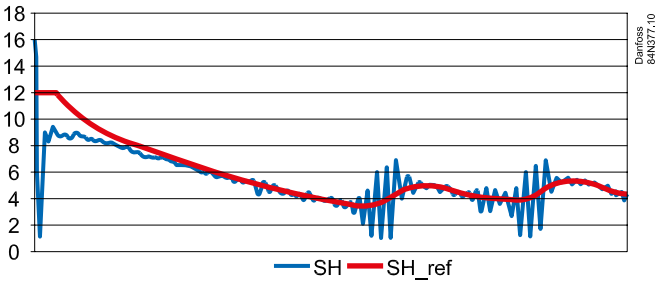

The superheat reference SH ref is adaptive and adjusted.

When using this form of control, there are three settings that have major affect on this mode of control.

Max. SH – The maximum limit of SH ref.

Min. SH – The minimum limit of SH ref. Care should be taken not to set this value too low in order to avoid flooding back into the compressor.

Stability – This factor determines how much instability can be accepted. Small values will cause the SH ref to increase if the slightest instability in SH is detected. Higher values will accept a higher degree of instability.

Function	Parameter	Default value
Superheat control -MSS	**n21**	**1**
Min Superheat Reference	n10	1K - 100K
Max Superheat Reference	n09	1K - 100K

Load define application

SH ref follows a defined curve as shown below. This curve is defined by three values: SH close SH max and SH min.

This form of regulation is similar to the thermostatic valve where the spring force can be adjusted to keep the SH (superheat) in the stable region to the right of the curve.
The advantage over the thermostatic valve is that there are three settings to define the operating curve.

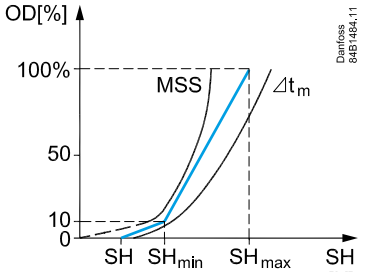

The reference follows a defined curve. This curve is defined by three values: the closing value, the min. value and the max. value. These three values must be selected in such a way that the curve is situated between the MSS curve and the curve for average temperature difference ΔTm (temperature difference between media temperature and evaporating temperature.
Setting example = n22 = 4, n10 = 6 and n09 =10 K).

Function	Parameter	Value
Superheat control mode -2 = Load define	**n21**	**2**
Min. Superheat Reference	n10	1K - 100K
Max. Superheat Reference	n09	1K - 100K
Value of min. SH ref for loads under 10%	n22	Must be below Min. SH (n10)

Using the MOP

In order to reduce the current to the compressor it is possible to control the maximum operating pressure of the evaporator. Evaporator pressure exceeds the "MOP" limit, the valve opening degree is controlled by the MOP function which will keep the pressure below the "MOP" limit. This function takes precedence over the superheat control, so during MOP control the superheat is not controlled.

The MOP function (address n11) is active when it is set to values less than the maximum range of the pressure transmitter. Setting it above the maximum range of the pressure transmitter or at 200 Bar will deactivate the MOP.. The pressure value is converted to the corresponding temperature value and when the MOP is active, the controller will prevent the evaporating temperature T1 from exceeding this value.

If Maximum Operating suction Pressure MOP parameter n11 is reset from factory setting 20 to 1 bar (gauge) From the MOP i.e 1 bar point the OD increases slower and slower until the pressure reaches MOP + 0.5 i.e 1.5 bar. Subsequently the OD decreases rapidly as the pressure increases.

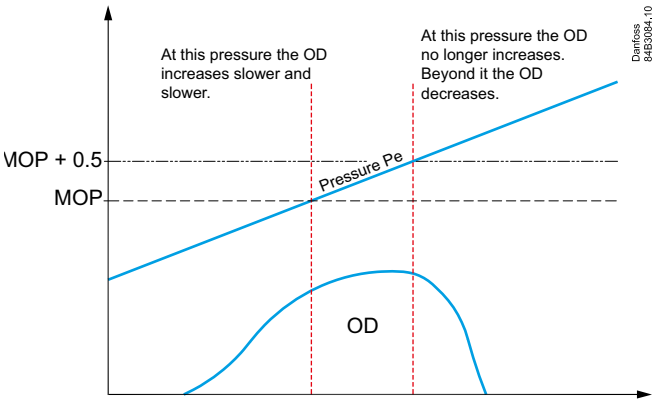

Function	Parameter	Value
Maximum operating pressure MOP	n11	0-200 bar

Types of regulation

As a general rule, do not use mode 2 (Load define application) if the effect is not evaluated by e.g. an OEM chiller manufacturer in a laboratory.
An incorrect setting will only make regulation poorer than the factory setting of mode 1.

Single Loop (address o56 Reg.type = 1)
The EKD 316 / EKD 316C has the traditional PI controlling function with the Kp factor for Proportional Gain and Tn for Integration Time in seconds. This is also known as the Single loop control with only one PI block, as shown in the diagram below.

Instability caused by too much Proportional Gain can be corrected by reducing to the value of the Kp factor.

This should be done by gradually reducing and observing the results before making further reductions.

If the superheat response is slow to change, it can be increased by reducing the value of the Integration Time Tn.

When tuning the superheat stability, it is good practice to have a fixed superheat reference by making *SH max the same as SH min*.

Double Loop (address o56 Reg.type = 2)
The controller can regulate the superheat using a double loop system. The so-called outer loop is really the same as in the single loop system except that the output of PI block is the reference for the inner loop.
The inner loop also has a PI block where the Proportional Gain factor is KpT0 and the Integration Time is TnT0.

The feedback of the inner loop is the temperature difference between media temperature S4 and S1. This value represents the load on the evaporator and large values will tend to increase the opening degree OD% of the valve.

The tuning of the double loop is more complicated than the single loop and it is advisable not to change too many parameters at the same time. The starting point should be to use the following settings.

Function	Parameter	Value
Kp factor	n04	0.7
Tn sec	n05	120
KpT0	n20	3
TnT0 sec	n44	30

If the superheat is unstable, the KpT0 parameter should be slightly reduced. The value parameter Kp factor is not large so little is gained by reducing this parameter.
For details refer to the "Finding the optimum setting" section.

When to use Single or Double Loop
In most applications and especially air coolers, the single loop is the best option due to its simplicity and being easier to tune.
In water chillers where the S4 sensor is located at the leaving water outlet, the double loop gives some advantage in terms of being less susceptible to compressor or fan step changes. In addition, it opens the valve quicker during startup. However, the double loop is less advantageous on air coolers because of the slower response to the media temperature changes.

Recommended control loop type and settings for some applicatiions
From the experience of using single loop and double regulation, the following recommendations are given. These are only recommendations and the final choice is made by the end user.

Application	Reg. type	Kp factor	Tn sec	KpT0	TnT0 sec
	address o56	address n04	address n05	address n20	address n44
Air cooler	1 (Single loop)	3.0	120	0.4	-
Water chiller	2 (Double loop)	0.7	120	2.0	30

⚠ **Note:**
The S4 sensor has to be connected when Reg. type = 2, otherwise an alarm sounds.

⚠ **Note:**
After o56 is changed, the controller must be switched off and powered up again.

Manually operating the valve

There are two modes for operating the valve manually, and these are described in the following sections.

Operating the valve manually from the external display (or via MODBUS)
The opening degree of the ETS can be operated manually by setting parameter o18 to 1 and then setting parameter o45 to the required opening degree between 0% and 100%. Relay outputs can also be checked using parameter o18.

Manual control of outputs For service purposes the valve output and alarm relay outputs can be forced. OFF: No override 1: Manual control via o45 is enabled 2: The alarm relay releases so that there is a connection between 24 and 25 (= alarm) 3: The alarm relay picks up so that there is a connection between 25 and 26 (= no alarm)	018	Manual ctrl
Manual control of the valve's opening degree	045	0 - 100% valve OD

Operating the valve manually using an external analogue signal
The opening degree of the stepper motor valve can be operated manually with 0 - 20 mA or 4 - 20 mA or 0 - 10 V or 1 - 5 V external analogue signal connected to terminals 21 (-) and 22 (+) of the controller.

Controlling a valve with an analogue signal	061	Application mode 061=1
Input signal for external control of the valve's opening degree Only used if o61 is set to 1. Definition of the signal's range: 0: No signal 1: 0 - 20 mA 2: 4 - 20 mA 3: 0 - 10 V 4: 1 - 5 V (At the lower value the valve will be closed. At the upper value the value will be fully open. There is a linear relationship between the signal and the opening degree. The height of the valve is not taken into account.)	o10	AI type

Finding the optimum settings

Details on the controller algorithm and settings

Kp factor (n04) and Kp min (n19)

The Proportional Gain is dependent on the value of the measured superheat SH relative to Reference superheat SH ref. The Proportional Gain has the following values relative to superheat SH:

If SH is more than 2.5K greater than SH ref, then Gain equals Kp factor.
If SH is within the range -0.5 and 2.5K from SH ref, then Gain equals Kp factor times Kp min.

The reason for this variable Gain is to provide stable superheat for values near the superheat reference.

⚠ **Note:**
The value of Gain does not change suddenly but gradually when SH gets close to SH ref.

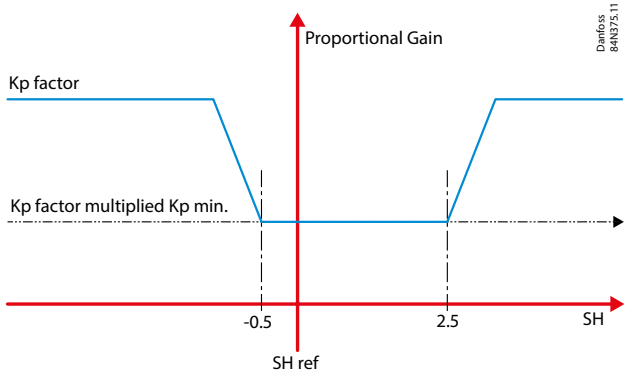

Initial "Kick start" startup

In general the valve opening degree is controlled by the measured value of the superheat SH. This means that during certain situations during startup, the valve will be slow to open due to the built-up of superheat from a small value. To prevent this from happening, the valve is given an initial opening degree dependent on the Kp factor, the measured superheat SH and SH close, as given in the following relationship:

Initial OD% = kp factor(SH – SH close)*

This procedure is not to be confused with the force opening of the valve given in the "Problems with startup" section.

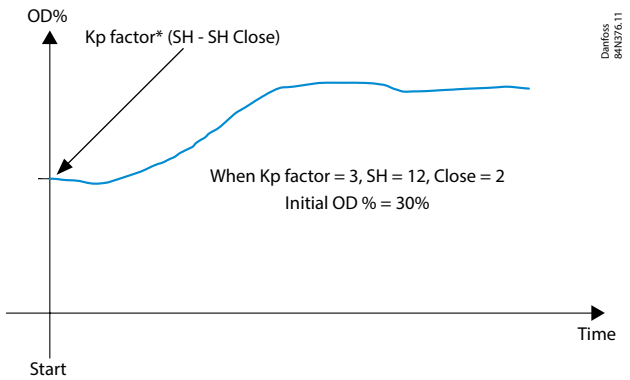

Problems with startup

Sometimes in one-to-one applications, the valve does not open sufficiently on startup, and troublesome low pressure trips may occur. This problem is typical when using the single loop control where only the SH controls the opening of the valve.

The *force opening of valve* function has been implemented in the EKD 316 / EKD 316C controller. After startup, this function will provide a constant, set minimum opening degree during a set time period, regardless of the superheat value. The setting parameters are called *Start OD%* (n17) and *StartUp time* (n15).

Please observe that the *Start OD%* is a minimum value after startup and if the measured superheat (u21) produces a value greater than *Start OD%* then the value will be valve opening degree (u24) – see the diagram.

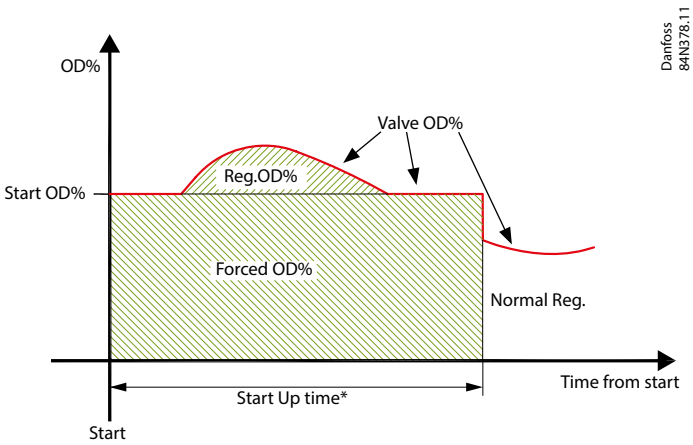

If the superheat fluctuates

When the refrigerating system has been made to work steadily, the controller's factory-set control parameters should in most cases provide a stable and relatively fast regulating system.
If the system, however, fluctuates this may be due to the fact that superheat parameters that are too low have been selected. Before starting any adjustment of the factory settings check the S2 sensor location – see section "Installation sensors".

If adaptive superheat has been selected (n21 = 1):
Adjust: n09, n10 and n18.

If load-defined superheat MSS has been selected (n21 = 2):
Adjust: n09, n10 and n22.

Alternatively it may be due to the fact that the set regulation parameters are not optimal.

If the time of oscillation is longer than the integration time:
($T_p > T_n$ (T_n is e.g. 240 seconds))
1. Increase T_n to 1.2 times T_p
2. Wait until the system is in balance again
3. If there is still oscillation, reduce K_p by e.g. 20%
4. Wait until the system is in balance
5. If it continues to oscillate, repeat 3 and 4

If the time of oscillation is shorter than the integration time:
($T_p < T_n$ (T_n is e.g. 240 seconds))
1. Reduce K_p by e.g. 20% of the scale reading
2. Wait until the system is in balance
3. If it continues to oscillate, repeat 1 and 2.

Troubleshooting

Symptom	Possible Cause	Remedy
Suction pressure too low	Pressure drop across the evaporator too high	
	Lack of subcooling ahead of expansion valve	Check refrigerant ahead of expansion valve. If the valve is placed much higher than condenser outlet, check pressure difference.
	Evaporator superheat too high	1. Check superheat performance, the settings SH min and SH max. 2. Check valve capacity. 3. Check that the maximum number of steps of valve is same as parameter n37.
	Pressure drop across the expansion valve less than valve is sized for	Check pressure drop across expansion valve. Replace with larger valve.
	Expansion valve too small	Check refrigeration system capacity and compare with expansion valve capacity. Replace with larger valve if necessary.
	Expansion valve block with foreign material	Remove valve and examine the orifice.
	Evaporator wholly or partly iced up	De-ice evaporator
Liquid hammer in compressor	Superheat of expansion valve too low	Increase the values of SH close and SH min.
	Superheat reference set too low	Increase the value of SH min
	The S2 sensor not in good contact with the suction line	Ensure that S2 sensor is secured on suction line. Insulate sensor.

Alarms

Symptom	Possible Cause	Fault Message	Remedy
The controller can give the following messages	Error message	E1	Fault in controller
		E24	S2 Sensor error
		E25	S4 Sensor error
		E19	The input signal on terminals 21 - 22 is outside the range.
		E20	The input signal on terminals 17 - 19 is below minumum limit (P0 signal)
	Alarm message	A11	No refrigerant has been selected
		A44	Battery alarm (no voltage or too low voltage)
	Status codes	S5	MOP
		S10	Refrigeration stopped r12=off
		non	Regulation, no fault

⚠ **Note:**

1. Only one alarm is displayed at a time in the controller display and are shown in the order given above. All alarms are displayed in the AKM system.
2. The alarm E19 will only be active if address o10 is set to 1 or more.
3. EKD 316 / EKD 316C with change over relay (3 terminals 24-25-26)
4. The battery alarm A44 is only active when battery alarm address A34 is set to ON.

Appendix I

Menu survey for EKD 316

(For EKD 316C default parameter setting see Parameter identification table)

Function	Para-meter	Min.	Max.	Factory setting	Application choice menu = o61	
The menus from either column 1 or column 2 are shown					**1**	**2**
Normal display						
During regulation the actual level of superheating is displayed. (If you would like to see the expansion valve's actual opening degree, press the bottom button for approx. one second.)	-	K		-		✓
During control with an analogue signal the opening degree is displayed.	-	%		-	✓	
Reference						
Units (0 = °C +bar / 1 = °F + psig)	r05	0	1	0		✓
Correction of signal from S2	r09	-10.0 K	10.0 K	0.0		✓
Correction of signal from S4	r10	-10.0 K	10.0 K	0.0		✓
Start/stop of refrigeration	r12	Off/0	On/1	Off/0	✓	✓
Alarm						
Battery monitoring	A34	Off/0	On/1	Off/0	✓	✓
Regulating parameters						
Valve definition: 0 = ETS 12.5, ETS 25, KVS 15 1 = ETS 50, CCM 10 – CCM 30 2 = ETS 100, CCM 40 3 = ETS 250, KVS 42 4 = ETS 400 5 = user-defined 6 = UKV/SKV/VKV/PKV 7 = ETS 6 8 = CCMT 2 – CCMT 8 9 = CCMT 16 10 = CCMT 24 11 = CCMT 30 12 = CCMT 42 13 = CTR 14 = CCMT 0 15 = CCMT 1 On using external display EKA 164A, please check section *valve overview*	n03	0	15	1	✓	✓
P: Amplification factor Kp o56 = 1; n04 = 2.0 o56 = 2; n04 = 0.7 (⚠ **Warning:** Changes to n04 are lost when changing o56)	n04	0.5	20	2.0/0.7		✓
I: Integration time T	n05	30 s	600 s	120		✓
D: Differentiation time Td (0 = off)	n06	0 s	90 s	0		✓
Max. value of superheat reference	n09	1 K	100 K	10		✓
Min. value of superheat reference	n10	1 K	100 K	6		✓
MOP (max = off)	n11	0.0 bar	200 bar	20		✓
Signal reliability during startup. Safety time period. Should only be changed by trained staff	n15	0 sec.	90 sec.	0		✓
Signal reliability during startup – opening degree's start value. Should only be changed by trained staff.	n17	0%	100%	0		✓
Stability factor for superheat control. Changes should only be made by trained staff	n18	0	10	5		✓
Damping of amplification around reference value Changes should only be made by trained staff	n19	0.0	1.0	0.3		✓
Amplification factor for superheat Changes should only be made by trained staff o56 = 1; n20 = 0.4 o56 = 2; n20 = 3.0 (⚠ **Warning:** Changes to n20 are lost when changing o56)	n20	0.0	10.0	0.4/3.0		✓
Definition of superheat control mode 1 = MSS, 2 = LOADAP	n21	1	2	1		✓
Value of min. superheat reference for loads under 10%	n22	1 K	15 K	4		✓
Max. opening degree Changes should only be made by trained staff	n32	0 %	100 %	100		✓
Number of steps from 0 - 100% opening degree (only if n03 = 5 (User-defined)) ⚠ **Note:** The display can only show three digits, but the setting value is four digits. Only the three most important are shown, i.e. a reading of e.g. 250 means a setting of 2500. (Automatic setting when valve is selected in n03).	n37	10 (100 stp)	999 (9990 stp)	262	✓	✓
Number of steps per second	n38	5 stp/s	300 stp/s	300	✓	✓
Start backlash (extra closing steps at 0% opening (in % of n37))	n39	0%	100%	10	✓	✓
Integration time for inner loop (TnT0)	n44	10 s	120 s	30		✓
Compensation for spindle play	n40	0 stp	100 stp	23 stp		✓

Menu survey for EKD 316 continued

Function	Para-meter	Min.	Max.	Factory setting	Application choice menu = o61	
The menus from either column 1 or column 2 are shown					**1**	**2**
Miscellaneous						
Controller's address	o03	0	240	240	✓	✓
If the valve's opening degree should be controlled with an external signal, the signal is defined as: 0: no signal 1: 0 - 20 mA 2: 4 - 20 mA 3: 0 - 10 V 4: 1 - 5 V	o10	0	4	0	✓	
Manual control of outputs: OFF: no manual control 1: Manual control with "o45" enabled 2: Simulate Alarm off : connection between 24 and 25 3: Simulate Alarm on : connection between 24 and 26	o18	off/0	3	Off /0	✓	✓
Working range for pressure transmitter – min. value	o20	-1 bar	0 bar	-1.0		✓
Working range for pressure transmitter – max. value	o21	1 bar	200 bar	12.0		✓
Refrigerant setting 1 = R12 7 = R13b1 13 = User def. 19 = R404A 25 = R290 31 = R422A 37 = R407F 2 = R22 8 = R23 14 = R32 20 = R407C 26 = R600 32 = R413A 38 = R1234ze 3 = R134a 9 = R500 15 = R227 21 = R407A 27 = R600a 33 = R422D 39 = R1234yf 4 = R502 10 = R503 16 = R401A 22 = R407B 28 = R744 34 = 427A 40 = R448A 5 = R717 11 = R114 17 = R507 23 = R410A 29 = R1270 35 = R438A 41 = R449A 6 = R13 12 = R142b 18 = R402A 24 = R170 30 = R417A 36 = R513A 42 = R452A For EKD 316C the default factory setting for parameter o30 is 0 = none refrigerant selected	o30	0	42	0		✓
Manual control of the valve's opening degree. The function can only be operated if o18 has been set to "1". This function is only for manual operation. It must not be used for as a regulation function.	o45	0 %	100 %	0	✓	✓
Selection of control mode: 1= Normal 2 = With inner loop (S media temperature less T0)	o56	1	2	1		✓
Application mode. Menus blanked out so only the shaded menus are seen. See the two columns to the right. 1: Controlling a valve with an analogue signal 2: Superheat regulation	o61	1	2	2	1	2
Holding current	h22	0 %	100 %	20 %	✓	✓
High pressure alarm	o99	0	1	0	✓	✓
Overdrive						
Open hysteresis is the minimum requested opening degree required before the valve will open. This value cannot be lower than the Close hysteresis.	P67	0%	100%	1%	✓	✓
Close hysteresis: if the requested opening degree is below this value, the valve will close to 0%. This value cannot be set higher than the Open hysteresis.	P68	0%	100%	1%	✓	✓
Overdrive enable level. The opening degree needs to be above this value, before the overdrive will become enabled. When the overdrive is enabled the valve will overdrive once it is closed to 0%	P69	0%	100%	10%	✓	✓
Overdrive protection time. The valve will not overdrive until this time has elapsed after the last overdrive. This prevents too frequent overdrives. The default is 0 meaning that it is off and doesn't limit overdrives.	P70	0 hours	999 hours	0	✓	✓
Forced overdrive time. The valve is forced to close and overdrive after this time has elapsed. The valve will then open again to the desired opening degree. The default is 0 meaning it is off and doesn't force close.	P71	0 hours	999 hours	0	✓	✓
Service						
Analog input (21 - 22)	u06	mA (V)			✓	
Read status of input DI (20 - 21)	u10	on/off			✓	✓
Temperature at S2 sensor	u20	°C				✓
Superheat	u21	K				✓
Superheat reference	u22	K				✓
Read valve's opening degree	u24	%			✓	✓
Read evaporating pressure	u25	bar				✓
Read evaporating temperature	u26	°C				✓
Temperature at S4 sensor	u27	°C				✓

Configuration settings (n03, n37, n38, n39, n40, o03, o30, o56 and o61) available only when regulation is stopped (r12=off).
Factory settings are indicated for standard unit (see code number, page 1). Other code number have customised settings.

Survey of functions

Function	Para-meter	Parameter by operation via data communication
Normal display		
The superheat is normally shown. The opening degree is displayed during manual operation or if the valve is under analogue control.		SH/OD%
Reference		
Unit Here you select whether the controller is to indicate the temperature values in °C or in °F and pressure values in bar or psig. If indication in °F is selected, other temperature settings will also switch to Fahrenheit, either as absolute values or as delta. The combination of temperature unit and pressure unit is depicted to the right.	r05	Units (Menu = Misc.) 0: °C + bar 1: °F + psig
Correction of signal from S2 (Compensation possibility through long sensor cable).	r09	Adjust S2
Correction of signal from S4 (Compensation possibility through long sensor cable).	r10	Adjust S4
Start/stop of refrigeration With this setting, refrigeration can be started and stopped. Start/stop of refrigeration can also be accomplished with the external switch function. See also appendix 1.	r12	Main Switch
Alarm		**Alarm setting**
If there is an alarm, the LEDs on the front of the external display will flash if it is connected. The alarm relay in the controller is closed.		
Battery alarm Here it is defined whether the controller is to monitor the voltage from the battery backup. If there is low voltage, or no voltage, an alarm will be given	A34	Batt. alarm

Control parameters Injection control		
Valve definition for EKD 316. **For EKD 316C refer to section "Stepper motor valve type"**		
0 = ETS 12½, ETS 25, KVS 15 1 = ETS 50, CCM 10 – CCM 30 2 = ETS 100, CCM 40 3 = ETS 250, KVS 42 4 = ETS 400 5 = user-defined 6 = UKV/SKV/VKV/PKV 7 = ETS 6 8 = CCMT 2 – CCMT 8 9 = CCMT 16 10 = CCMT 24 11 = CCMT 30 12= CCMT 42 13= CTR 14= CCMT 0 15= CCMT 1 On using external display EKA 164A, please check page 9 section ETS valve	n03	Valve type
P: Amplification factor Kp If the Kp value is reduced the regulation becomes slower.	n04	Kp factor
I: Integration time Tn If the Tn value is increased the regulation becomes slower.	n05	Tn sec.
D: Differentiation time Td The D-setting can be cancelled by setting the value to min. (0).	n06	Td sec.
Max. value for the superheat reference	n09	Max SH
Min. value for the superheat reference ⚠ **Warning**: Due to the risk of liquid flow, the setting should not be lower than approx. 2-4 K.	n10	Min SH
MOP ⚠ **Note:** If no MOP function is required, select pos. Off. (A value of 200 corresponds to Off)	n11	MOP (bar)
Startup time for safety signal If the controller does not obtain a reliable signal within this period of time the controller will try to establish a stable signal in other ways. (A value that is too high may result in a flooded evaporator). The value should only be changed by specially-trained staff .	n15	StartUp time
Signal safety during startup The control function uses the value as a start value for the valve's opening degree at each thermostat cut-in. By adaptive control the controller continuously calculates a new value. The value should only be changed by specially-trained staff.	n17	Start OD%
Stability factor for regulation of superheat With a higher value, the control function will allow a greater fluctuation of the superheat before the reference is changed. The value should only be changed by specially-trained staff.	n18	Stability

Survey and function (continued)

Function	Para-meter	Parameter by operation via data communication
Damping of amplification near reference value This setting damps the normal amplification Kp, but only just around the reference value. A setting of 0.5 will reduce the KP value by half. The value should only be changed by specially-trained staff.	n19	Kp Min
Amplification factor for the superheat This setting determines the valve's opening degree as a function of the change in evaporating pressure. An increase of the evaporating pressure will result in a reduced opening degree. When there is a drop-out on the low-pressure thermostat during startup, the value must be raised slightly. If there is pendling during start-up, the value must be reduced slightly. The value should only be changed by specially-trained staff.	n20	Kp T0
Definition of superheat regulation (Ref. section "Operation") 1: Lowest permissible superheat (MSS). Adaptive regulation. 2: Load-defined superheat. The reference is established based on the line formed by the three points: n09, n10 and n22.	n21	SH mode
Value of min. superheat reference for loads under 10% (The value must be smaller than "n10").	n22	SH Close
Max. opening degree The valve's opening degree can be limited. The value is set in %.	n32	ETS OD% Max
Number of steps from 0% to 100% open (User-defined valve, n03 =5) (Automatic setting when valve is selected in n03).	n37	Max. steps (100 to 9990 step)
Spindle stroke speed (number of steps per second) (Automatic setting when valve is selected in n03).	n38	Steps/sec (5 to 300 step/sec)
Integration time for the inner loop gain Used only when o56 = 2 The value should only be changed by specially-trained staff.	n44	TnT0 sec

Miscellaneous		
Address/data communication The controller must always have an address. The factory-set address is 240. When an external display is connected, the display itself will find the address of the controller so that communication can take place. ⚠ **Note:** **A display and a system unit must not be connected at the same time.** **The display will not be able to communicate in this situation.** If the controller is to be part of a network with other controllers and a system unit, the controller's address must be within the range 1 to 200. This address must EITHER be set via a display before it is connected to the data communication and a scan of the network is performed OR the network is connected and a scan is performed. The address is then set afterwards. A new scan is performed so that the new address is known. Requirements for the installation and data communication cable are discussed in the separate document no. "RC8AC".		The controller can be operated via the system unit and AK service tool. It cannot be operated via AKM type system software.
	o03	Unit addr. The address is set between 0 and 200. (When the address is set, the system the system unit's scan function should be activated)
Application mode 1: The controller receives signals from another controller and must control the valve's opening degree. 2: Superheat regulation.	o61	Appl. mode
Input signal for external control of the valve's opening degree Only used if o61 is set to 1. Definition of the signal's range. 0: No signal 1: 0-20 mA / 2: 4-20 mA / 3: 0-10 V / 4: 1-5 V (At the lower value the valve will be closed. At the upper value the value will be fully open. There is a linear relationship between the signal and the opening degree. The height of the valve is not taken into account.)	o10	AI type

Survey and function (continued)

Function	Para-meter	Parameter by operation via data communication
Manual control of outputs For service purposes the ETS-output and alarm relay outputs can be forced However, only when regulation has been stopped. OFF: No override 1: Manual control via o45 is enabled 2: The alarm relay releases so that there is a connection between 24 and 25 (= alarm) 3: The alarm relay picks up so that there is a connection between 25 and 26 (= no alarm)	o18	Manual ctrl
Manual control of the ETS valve The valve's opening degree can be set manually. However, it does require "o18" to be set to "1", "2" or "3". This function must only be used for manual operation. It must not be used for external control.	o45	Manual ETS OD%
Working range for pressure transmitter Depending on the application, a pressure transmitter with a given working range is used. For the range of (-1 to 12 bar), the min. value is set to -1 bar.	o20	MinTransPres.
For the range of (-1 to 12 bar), the max. value is set to 12 bar.	o21	MaxTransPres.
Selection of control algorithm Depending on the application, control can be carried out based on different parameters. The two possibilities are shown in section "Type of regulation". 1=normal control (single loop) 2=with inner loop regulation and S4 temperature less T0 (double loop) ⚠ **Note:** *** After o56 is changed, the controller must be switched off and powered up again.**	o56	Reg. type *
Refrigerant setting Before refrigeration can be started, the refrigerant must be defined. You can select the following refrigerants: 1 = R12, 2 = R22, 3 = R134a, 4 = R502, 5 = R717, 6 = R13 7 = R13b1, 8 = R23, 9 = R500, 10 = R503, 11 = R114, 12 = R142b 13 = User def., 14 = R32, 15 = R227, 16 = R401A, 17 = R507, 18 = R402A 19 = R404A, 20 = R407C, 21 = R407A, 22 = R407B, 23 = R410A, 24 = R170 25 = R290, 26 = R600, 27 = R600a, 28 = R744, 29 = R1270, 30 = R417A 31 = R422A, 32 = R413A, 33 = R422D, 34 = 427A, 35 = R438A, 36 = R513A 37 = R407F, 38 = R1234ze, 39 = R1234yf, 40 = R448A, 41 = R449A, 42 = R452A	o30	Refrigerant

For EKD 316C the default factory setting for parameter o30 is 0 = none refrigerant selected
(⚠ **Warning**: *Incorrect selection of refrigerant may cause damage to the compressor).*

Service		Service
A number of controller values can be printed for use in a service situation		
Read value of external current signal/voltage signal (Ext.Ref.)	u06	Analogue input
Read status of input DI (start/stop input)	u10	DI
Read the temperature at the S2 sensor	u20	S2 temp.
Read superheat	u21	SH
Read the control's actual superheat reference	u22	SH ref.
Read the valve's opening degree	u24	OD%
Read evaporating pressure	u25	Evap. pres. P_e
Read evaporating temperature	u26	Evap.Press.T_e
Read the temperature at the S4 sensor	u27	S4 temp.
	--	DO1 Alarm Read status of alarm relay
Operating status		
The controller's operating status can be called forth by a brief (1s) activation of the upper button. If a status code exists, it will be shown. (Status codes have lower priority than alarm codes. This means that status codes cannot be seen if there is an active alarm code. The individual status codes have the following meanings:		EKC State (0 = regulation)
S10: Refrigeration stopped by the internal or external start/stop.		10

Appendix II

General information to MODBUS communication via a PLC etc.

* Baudrate : 19200
* EKD Address : 240
* Polarity A-A and B-B
* Termination with 120 ohm resistor

Some parameters have what is called a "config lock". This means that they can only be changed when the main switch of the EKD is set to OFF (r12 = 0). This applies for instance to the type of refrigerant (o30). So if you want to change the refrigerant, the main switch (r12) must first be set to 0, then the refrigerant type (o30) can be changed.

The following parameters require the main switch to be OFF:

n03	Valve type
n37	Max steps
n38	Max steps/sec
o03	Unit address
o30	Refrigerant
o56	Regulation type
o61	Application mode

Please refer to the manual for descriptions of these parameters.

It should be possible to change all other parameters while the unit is running (regulation parameters etc.).

Example:
EKD 316 / EKD 316C as simple ETS valve driver function with the following settings:

- PNU 117 [0] r12 Main switch = 0
- PNU 2075 [1] o18 Manual mode
- PNU 2064 [OD%] o45 Manual ETS OD% (replace 0-10V signal)
- PNU 3032 [262] n37 Max. steps 2620
- PNU 3033 [250] n38 Steps pr. sec 250

- EKD 316 / EKD 316C address : 240
- PNU 2064 will go back to 0% at power off as the only one

EKD 316 – Parameter identification (modbus)

Explanations:

Parameter – The parameter name and abbreviation
PNU – The Parameter Number. ⚠ **Note: This is equivalent to the modbus register number (modbus address + 1)**
R/W – R means read only, RW means it can be changed
Config lock – If the parameter is config locked it means that the value can only be changed when the main switch is off
Min. – The minimum value of the parameter
Max. – The maximum value of the parameter
Default – The default value of the parameter (factory setting)
Actual value – Values are read/written as 16 bit integer values without decimals. This is the default value as read via modbus
Scale – This shows the scaling factor of the value. *1 means that there is no scaling. *10 means that the read value is 10 times larger than the actual value.

Parameter	PNU	R/W	Config lock	Min	Max	Default	Actual value	Scale
Injection control (1)								
n04 Kp factor	3003	R/W		0.5	20.0	2.0	20	*10
n05 Tn seconds	3004	R/W		30	600	120	120	*1
n06 Td seconds	3005	R/W		0	90	0	0	*1
n09 Max SH	3015	R/W		1.0	100	10.0	100	*10
n10 Min SH	3021	R/W		1.0	100	6.0	60	*10
n11 MOP	3013	R/W		0.0	200.0	20.0	200	*10
n15 Start time	3017	R/W		1	90	0	0	*1
n17 MinOdAtStart	3012	R/W		0	100	0	0	*1
n18 Stability	3014	R/W		0	10	5	5	*1
n19 Kp min.	3024	R/W		0.0	1.0	0.3	3	*10
n20 Kp T0	3025	R/W		0.0	10.0	0.4	4	*10
n21 SH mode	3026	R/W		1	2	1	1	*1
n22 SH close	3027	R/W		1.0	15.0	4.0	40	*10
n32 ETS OD% Max	3023	R/W		0	100	100	100	*1
n44 TnT0 sec.	3039	R/W		10	120	30	30	*1
o56 Reg. type	2076	R/W	x	1	2	1	1	*1
Motor(2)								
n37 Max steps	3032	R/W	x	10	999	262	262	*1
n38 Max StepsSec	3033	R/W	x	5	300	300	300	*1
n39 Start backlash	3034	R/W	x	0	100	10	10	*1
n40 Backlash	3035	R/W	x	0	100	23	23	*1
n03 Valve type	3002	R/W	x	0	15	1	1	*1
N56 Motor current	3051	R/W		0	600	0	0	*1
h22 Holding current	2198	R/W	x	0	100	0	0	*1
Alarm settings (3)								
A34 Battery low	10035	R/W		0	1	0	0	*1
Miscellaneous (11)								
r05 Temp.unit	105	R/W		0	1	0	0	*1
r09 Adjust S2	113	R/W		-10.0	10.0	0.0	0	x10
r10 Adjust S3	114	R/W		-10.0	10.0	0.0	0	x10
o20 MinTransPres	2034	R/W		-1.0	0.0	0.0	0	*10
o21 MaxTransPres	2033	R/W		1.0	200.0	12.0	120	*10
o30 Refrigerant	2551	R/W	x	0	42	0	0	*1
o18 Manual ctrl.	2075	R/W		0	3	0	0	*1
o45 Manual OD%	2064	R/W		0	100	0	0	*1
o99 Enable high press. alarm	2199	R/W		0	1	0	0	*1
Service (12)								
o61 Appl.mode	2077	R/W	x	1	2	2	2	*1
u10 DI1 status	2002	R		0	1	0	0	*1
o10 AI type	2027	R/W		0	4	0	0	*1
u06 Analog input	2504	R		0.0	30.0	0.0	0.0	*10
--- AL/Light rel	2509	R		0	1	0	0	*1
--- Reset alarm	2046	R/W		0	1	0	0	*1
--- Rfg.Fac.A1	2548	R/W		8000	12000	10428	10428	*1
--- Rfg.Fac.A2	2549	R/W		-4000	-1000	-2255	-2255	*1
--- Rfg.Fac.A3	2550	R/W		2000	3000	2557	2557	*1
Alarms (13)								
--- Standby	20000	R		0	1	0	0	*1
--- EKC Error	20001	R		0	1	0	0	*1
--- S2 Error	20002	R		0	1	0	0	*1
--- S3 Error	20003	R		0	1	0	0	*1
--- P_e inp.error	20004	R		0	1	0	0	*1
--- AI inp.error	20005	R		0	1	0	0	*1
--- No Rfg. Sel.	20006	R		0	1	0	0	*1
--- Battery low	20008	R		0	1	0	0	*1
Danfoss only (14)								
o03 Unit addr.	2008	R/W	x	1	240	240	240	*1
No text (15)								
r12 Main switch	117	R/W		0	1	0	0	*1
u20 S2 temp.	2537	R		-200.0	200.0	0.0	0.0	*10
u21 Superheat	2536	R		0.0	100.0	0.0	0.0	*10
u22 SuperheatRef	2535	R		0.0	100.0	0.0	0.0	*10
u24 Opening %	2542	R		0	100	0	0	*1
u25 EvapPress P_e	2543	R		-200.0	200.0	0.0	0.0	*10
u26 EvapTemp T_e	2544	R		-200.0	200.0	0.0	0.0	*10
u27 Temp. S3	2545	R		-200.0	200.0	0.0	0.0	*10
--- EKC State	2007	R		0	100	0	0	*1

EKD 316C – Parameter identification (Modbus)

Lock - the value can only be changed when the main switch is off
PNU - equivalent to to the modbus register no. (modbus adress + 1).
Actual value
Values are read/written as 16 bit integer values without decimals. This is the default value as read via modbus.
Scale
This shows the scaling factor of the value. *1 means that there is no scaling. *10 means that the read value is 10 times larger than the actual value.

Parameter		PNU	R/W	Lock	Min.	Max.	Default	Actual value	Scale
Regulation Control									
r12	Main switch (Off = 0 / On = 1)	117	R/W	-	0	1	0	0	*1
o10	AI type (0: no signal 1: 0-20 mA, 2: 4-20 mA 3: 0-10 V, 4: 1-5 V) o61 should be set to 1 in order to use this feature	2027	R/W	-	0	4	0	0	*1
o18	Manual control	2075	R/W	-	0	3	0	0	*1
o45	Manual OD%	2064	R/W	-	0	100	0	0	*1
o56	Reg. type 1= Normal 2 = With inner loop	2076	R/W	x	1	2	1	1	*1
o61	Appl.mode 1: Valve driver mode using analogue signal 2: Superheat regulation	2077	R/W	x	1	2	2	2	*1
Valve									
n03	Valve type Ref. valve overview	3002	R/W	x	0	17	16	1	*1
n32	ETS OD% Max	3023	R/W	-	0	100	100	100	*1
n37	Max. steps [Stp]	3032	R/W	x	10	999	60	60	*1
n38	Max. Stp/Sec (Hz)	3033	R/W	x	5	300	160	160	*1
n39	Start backlash [%]	3034	R/W	x	0	100	10	3	*1
n40	Backlash [Stp]	3035	R/W	x	0	100	0	0	*1
n56	Motor current (mA RMS)	3051	R/W	x	0	600	0	0	*1
h22	Holding current [%]	2198	R/W	x	0	100	0	0	*1
Refrigerant									
o30	Refrigerant (Ref. appendix 1)	2551	R/W	x	0	42	0	0	*1
---	Rfg.Fac.A1	2548	R/W	-	8000	-	10428	10428	*1
---	Rfg.Fac.A2	2549	R/W	-	-4000	-	-2255	-2255	*1
---	Rfg.Fac.A3	2550	R/W	-	1000	3000	2557	2557	*1
Sensors									
r05	Temp.unit	105	R/W	-	0	1	0	0	*1
r09	Adjust S2 [K]	113	R/W	-	-1	10	0	0	x10
r10	Adjust S4 [K]	114	R/W	-	-1	10	0	0	x10
o20	Min. Trans. Pres. (bar relative)	2034	R/W	-	-1	0	-1	-10	*10
o21	Max. Trans. Pres. (bar relative)	2033	R/W	-	1	200	12	120	*10
o99	Enable high pressure alarm	2199	R/W	-	0	1	0	0	*1

EKD 316C – Parameter identification continued

Parameter		PNU	R/W	Lock	Min.	Max.	Default	Actual value	Scale
Injection control									
n04	Kp factor	3003	R/W	-	0.5	20	2	20	*10
n05	Tn seconds	3004	R/W	-	30	600	120	120	*1
n06	Td seconds	3005	R/W	-	0	90	0	0	*1
n09	Max SH	3015	R/W	-	1	100	10	100	*10
n10	Min SH	3021	R/W	-	1	100	6	60	*10
n11	MOP [bar] (max = off)	3013	R/W	-	0	200	20	200	*10
n15	Start time [sec]	3017	R/W	-	1	90	0	0	*1
n17	MinOdAtStart [%]	3012	R/W	-	0	100	0	0	*1
n18	Stability	3014	R/W	-	0	10	5	5	*1
n19	Kp min.	3024	R/W	-	0	1	0.3	3	*10
n20	Kp T0	3025	R/W	-	0	10	0.4	4	*10
n21	SH mode 1= MSS, 2 = Load app.	3026	R/W	-	1	2	1	1	*1
n22	SH close [K]	3027	R/W	-	1	15	4	40	*10
n44	TnT0 sec.	3039	R/W	-	10	120	30	30	*1
Service									
---	AL/Light rel	2509	R	-	0	1	0	0	*1
---	Reset alarm	2046	R/W	-	0	1	0	0	*1
---	EKC State	2007	R	-	0	100	0	0	*1
Alarms									
A34	A34 Battery low	10035	R/W	-	0	1	0	0	*1
---	Standby	20000	R	-	0	1	0	0	*1
---	EKC Error	20001	R	-	0	1	0	0	*1
---	S2 Error	20002	R	-	0	1	0	0	*1
---	S3 Error	20003	R	-	0	1	0	0	*1
---	Peinp. error	20004	R	-	0	1	0	0	*1
---	AI inp.error	20005	R	-	0	1	0	0	*1
---	No Rfg. Sel.	20006	R	-	0	1	0	0	*1
Read out									
u06	Analog input [mA]	2504	R	-	0	30	0	0	*10
u10	DI1 status	2002	R	-	0	1	0	0	*1
u20	S2 temp. [°C]	2537	R	-	-200	200	0	0	*10
u21	Superheat [K]	2536	R	-	0	100	0	0	*10
u22	Superheat Ref [K]	2535	R	-	0	100	0	0	*10
o03	Unit addr.	2008	R/W	x	1	240	240	240	*1

Installation considerations

Accidental damage, poor installation, or site conditions can give rise to malfunctions of the control system, and ultimately lead to a plant breakdown.
Every possible safeguard is incorporated into our products to prevent this. However, an incorrect installation, for example, could still present problems. Electronic controls are no substitute for normal, good engineering practice.

Danfoss will not be responsible for any goods, or plant components, damaged as a result of the above defects. It is the installer's responsibility to check the installation thoroughly, and to fit the necessary safety devices.
Particular attention is drawn to the need for a "force closing" signal to controllers in the event of compressor stoppage, and to the requirement for suction line accumulators.

Your local Danfoss agent will be pleased to assist with further advice, etc.

List of literature

www.danfoss.com

1. Mouse over "Products and solutions"
2. Click on "Products"
3. Click on "Documentation"
4. Click on "Technical literature" Refrigeration and air conditioning
5. Click on "Document search"
6. Click on "Filter"
7. Type or copy literature no. in the "Literature no." field

- Catalogue **RK0YG**
- ETS valves, technical brochure **DKRCC.PD.VD**
- Installation guide for data communication **RC8AC**

Your local Danfoss agent will be pleased to assist with further advice, etc.

Danfoss can accept no responsibility for possible errors in catalogues, brochures and other printed material. Danfoss reserves the right to alter its products without notice. This also applies to products already on order provided that such alterations can be made without subsequential changes being necessary in specifications already agreed.
All trademarks in this material are property of the respective companies. Danfoss and the Danfoss logotype are trademarks of Danfoss A/S. All rights reserved.